Integrated LED Light Bar Wiring Diagram

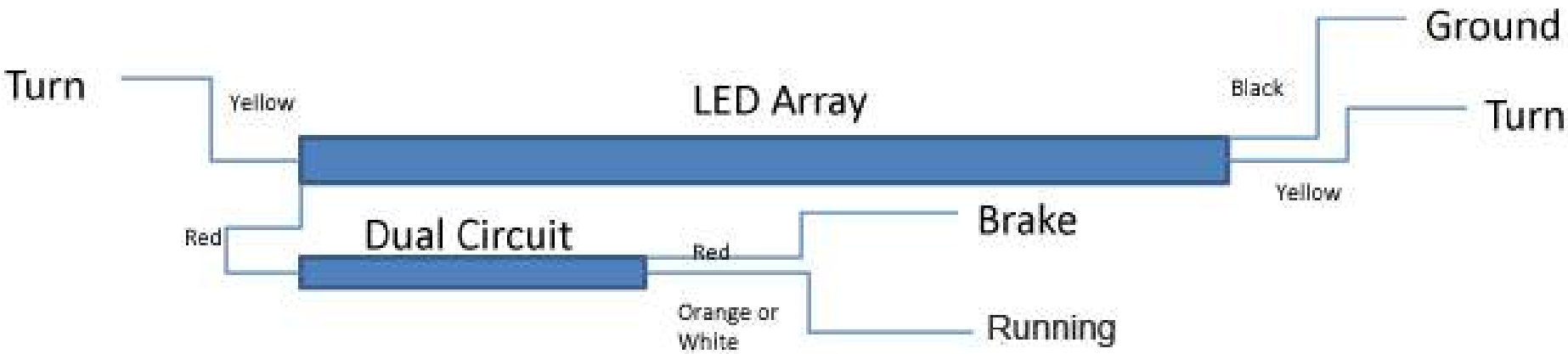

www.customdynamics.com